Critical Temperatures: all temps are in Degrees Fahrenheit

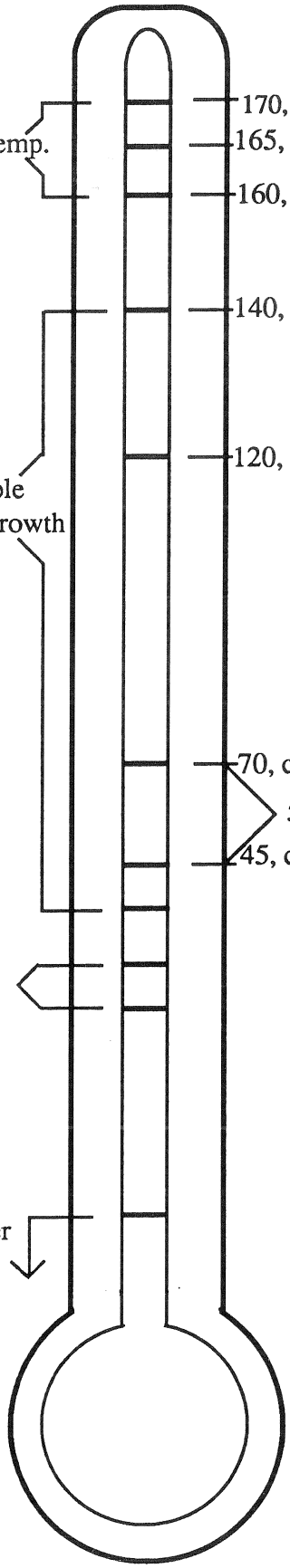

170, sanitizing water

140-170 beef internal cooked temp.

165, pork internal cooked temp.

160, chicken internal cooked temp.

140, steam table temp.

120, wash/rinse water

40-140, **DANGER ZONE**, perishable foods most prone to rapid bacteria growth

Defrosting Meat
To ensure that defrosting meats stay out of the danger temperature zone, you must follow one of 4 approved methods for defrosting meat.
1) in the refrigerator overnight.
2) under running cold water.
3) in the microwave.
4) while cooking.

70, cooling hot foods chilled to here within 3 hours*

50-70, pantry storage

45, cooling hot foods chilled to here within 3 hours*

35-40, refrigerator

0 or below, freezer

* Cooling hot foods must be placed in shallow containers (2-3 inches deep) and either placed in the refrigerator or placed in ice water until they have cooled down. Remember to store warmer foods above colder foods in the refrigerator.